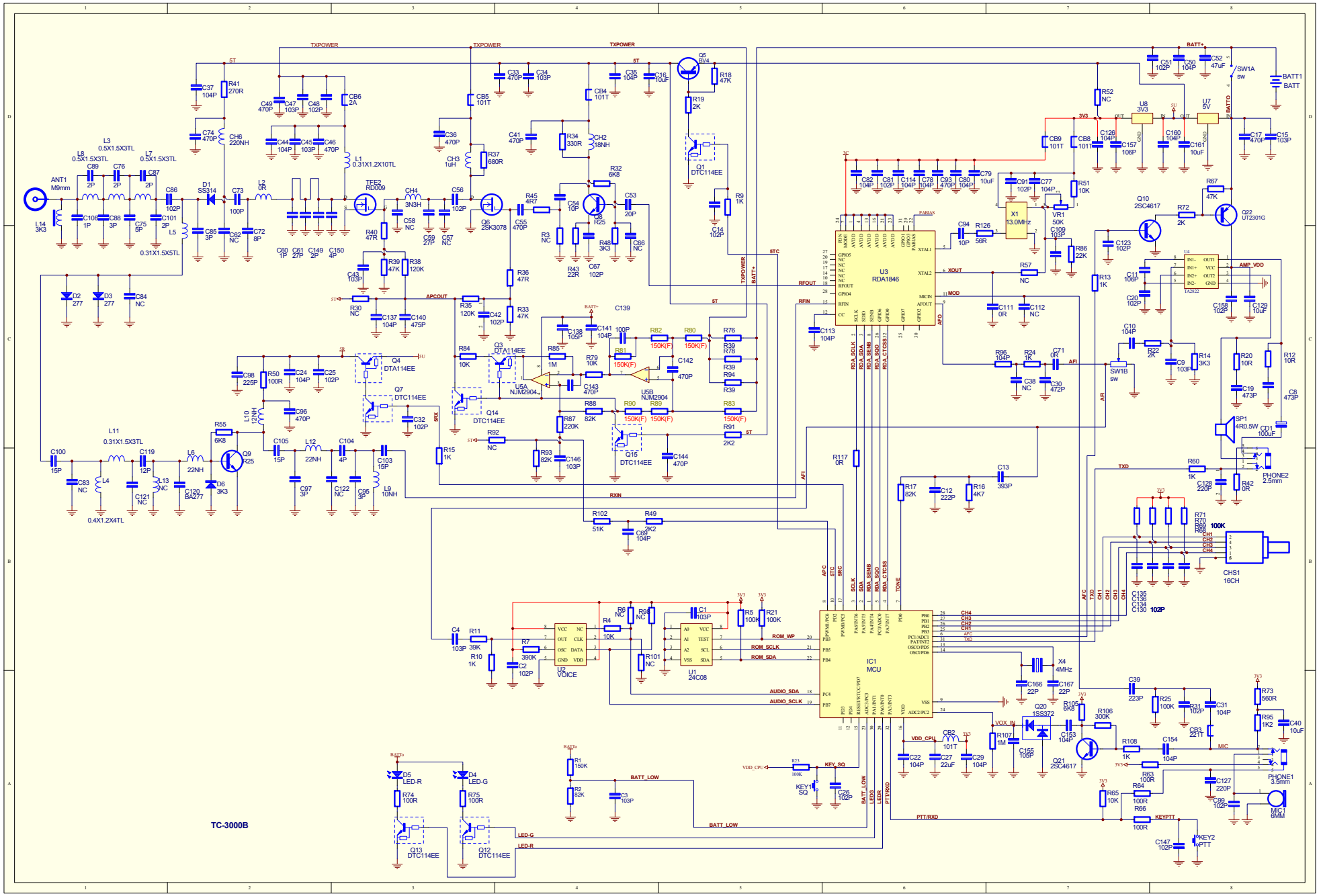
TC-3000B
ANT1
M9mm
L14
3K3
L3
0.5X1.5X3TL
L8
0.5X1.5X3TL
L7
0.5X1.5X3TL
L5
0.31X1.5X5TL
D1
SS314
L2
0R
L1
0.31X1.2X10TL
TFE2
RD009
Q6
2SK3078
Q5
BV4
Q1
DTC114EE
Q3
DTA114EE
Q4
DTA114EE
Q7
DTC114EE
Q14
DTC114EE
Q15
DTC114EE
U5A
NJM2904
U5B
NJM2904
U3
RDA1846
IC1
MCU
U2
VOICE
U1
24C08
U8
3V3
U7
5V
SW1A
SW1B
X1
13.0MHz
VR1
50K
Q10
2SC4617
Q22
UT2301G
U4
TA2822
SP1
4R0.5W
CD1
100uF
PHONE2
2.5mm
CHS1
16CH
X4
4MHz
Q20
1SS372
Q21
2SC4617
PHONE1
3.5mm
MIC1
6MM
KEY1
SQ
KEY2
PTT
D5
LED-R
D4
LED-G
Q13
DTC114EE
Q12
DTC114EE
TXPOWER
BATT+
BATT
APCOUT
RFOUT
RFIN
XOUT
MOD
AFO
AFI
AMP_VDD
TXD
RXIN
ROM_WP
ROM_SCLK
ROM_SDA
AUDIO_SDA
AUDIO_SCLK
VDD_CPU
KEY_SQ
BATT_LOW
LED-G
LED-R
PTT/RXD
KEYPTT
MIC
VOX_IN
TONE
SRX
STC
AFC
3V3
5T